ARMARIOS REFRIGERADOS

# ARMARIOS GN 2/1

PAG-118-119

**AGR**

**2003-2004-2005-2006**

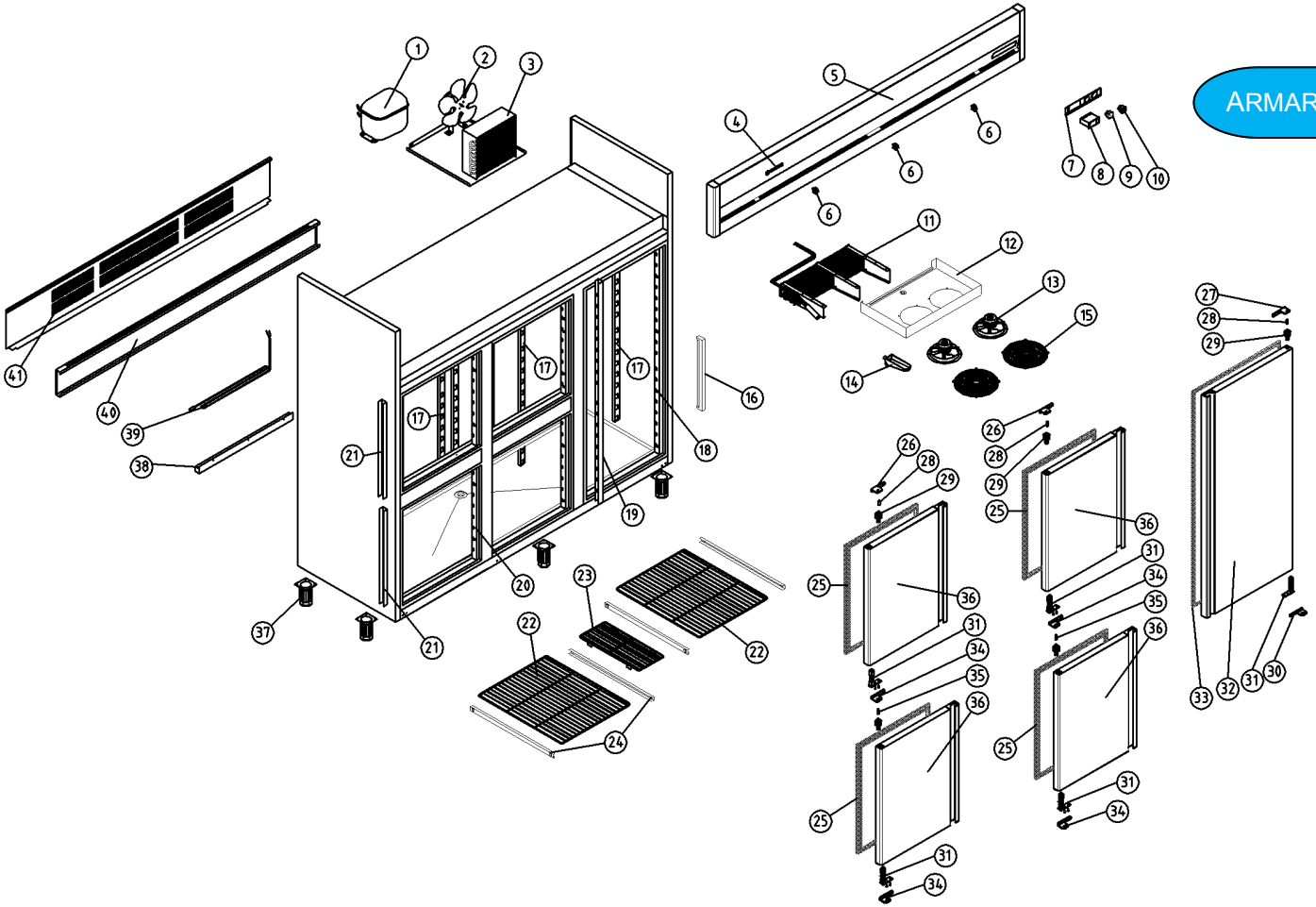

| Nº | DESCRIPCIÓN | DESCRIPTION | AGR-2003 | PVP | AGR-2004 | PVP | AGR-2005 | PVP | AGR-2006 | PVP |
|---|---|---|---|---|---|---|---|---|---|---|
| 1 | COMPRESOR | COMPRESSOR | 6021010159 | € | 6021010159 | € | 6021010159 | € | 6021010159 | € |
| 2 | VENTILADOR CONDENSADOR | CONDESER FAN | 6021050002 | 35€ | 6021050002 | 35€ | 6021050002 | 35€ | 6021050002 | 35€ |
| 3 | CONDENSADOR | CONDENSER | 6029020016 | 175€ | 6029020016 | 175€ | 6029020016 | 175€ | 6029020016 | 175€ |
| 4 | LOGOTIPO | LOGOTYPE | 6023010551 | 7€ | 6023010551 | 7€ | 6023010551 | 7€ | 6023010551 | 7€ |
| 5 | CABEZA CUADRO DE MANDOS | CONTROL PANEL GRILLE | | € | | € | | € | | € |
| 6 | MICRORRUPTOR | COMMUTATOR SWITCH | 6021130032 | 4€ | 6021130032 | 4€ | 6021130032 | 4€ | 6021130032 | 4€ |
| 7 | CARATULA CROMADA | CHROMEPLATED COVER | 6003010476 | 5€ | 6003010476 | 5€ | 6003010476 | 5€ | 6003010476 | 5€ |
| 8 | TERMOSTATO | THERMOSTAT | 6021350097 | 99€ | 6021350097 | 99€ | 6021350097 | 99€ | 6021350097 | 99€ |
| 9 | INTERRUPTOR GENERAL | MAIN SWITCH ON/OF | 6021130011 | 6€ | 6021130011 | 6€ | 6021130011 | 6€ | 6021130011 | 6€ |
| 10 | PILOTO LUMINOSO | LIGHT PILOT | 6021130013 | 4€ | 6021130013 | 4€ | 6021130013 | 4€ | 6021130013 | 4€ |
| 11 | EVAPORADOR | EVAPORATOR | 6029010097 | 368€ | 6029010097 | 368€ | 6029010097 | 368€ | 6029010097 | 368€ |
| 12 | CAJA EVAPORADOR | TO COVER EVAPORATOR | A109050302 | 72€ | A109050302 | 72€ | A109050302 | 72€ | A109050302 | 72€ |
| 13 | VENTILADOR EVAPORADOR | EVAPORATOR FAN | 6021050010 | 51€ | 6021050010 | 51€ | 6021050010 | 51€ | 6021050010 | 51€ |
| 14 | DESAGÜE CANALIZADOR | DRAIN CANAL | 6003010184 | 8€ | 6003010184 | 8€ | 6003010184 | 8€ | 6003010184 | 8€ |
| 15 | REJILLA VENTILADOR | FAN GRILLE | 6027130004 | 24€ | 6027130004 | 24€ | 6027130004 | 24€ | 6027130004 | 24€ |
| 16 | REGLETA FLUORESCENTE | FLUORESCENT KIT TUBE | 6021290051 | 30€ | 6021290051 | 30€ | 6021290051 | 30€ | 6021290051 | 30€ |
| 17 | CREMALLERA INTERIOR | INTO SHELF RACK | A109050479 | 33€ | A109050479 | 33€ | A109050479 | 33€ | A109050479 | 33€ |
| 18 | CREMALLERA DELANTERA DCH. | RIGH FRONT SHELF RACK | A109050564 | 33€ | A109050564 | 33€ | A109050564 | 33€ | A109050564 | 33€ |
| 19 | CREMALLERA DELTANTERA IZQ. | LEFT FRONT SHELF RACK | A109050563 | 33€ | A109050563 | 33€ | A109050563 | 33€ | A109050563 | 33€ |
| 20 | CREMALLERA DELT.PEQ. DCH. | SMALL RIGH FRONT SHELF RACK | A109050557 | 18€ | A109050557 | 18€ | A109050557 | 18€ | A109050557 | 18€ |
| 21 | CREMALLERA DELT. PEQ. IZQ. | SMALL LEFT FRONT SHELF RACK | A109050556 | 18€ | A109050556 | 18€ | A109050556 | 18€ | A109050556 | 18€ |

| Nº | DESCRIPCIÓN | DESCRIPTION | AGR-2003 | PVP | AGR-2004 | PVP | AGR-2005 | PVP | AGR-2006 | PVP |
|---|---|---|---|---|---|---|---|---|---|---|
| 22 | ESTANTE PARRILLA 650x530mm | LAMINATED SHELF 650x530mm | 6027010009 | 45€ | 6027010009 | 45€ | 6027010009 | 45€ | 6027010009 | 45€ |
| 23 | PARRILLA SUPLETORIA 430x200mm | ADDITIONAL LAMINATED SHELF | 6027010017 | 14€ | 6027010017 | 14€ | 6027010017 | 14€ | 6027010017 | 14€ |
| 24 | JUEGO DE GUIAS 662mm | SET OF SHELF SLIDES 662mm | 6033050025 | 25€ | 6033050025 | 25€ | 6033050025 | 25€ | 6033050025 | 25€ |
| 25 | BURLETE 691x636mm | SEAL 691x636mm | 6045010132 | 21€ | 6045010132 | 21€ | 6045010132 | 21€ | 6045010132 | 21€ |
| 26 | SOP.SUP.IZQ..BISAGRA | UPPER HINGE LEFT SUPPORT | 6033010110 | 5€ | 6033010110 | 5€ | 6033010110 | 5€ | 6033010110 | 5€ |
| 27 | SOPORTE BISAGRA SUP. DRCH. | UPPER SUPPORT RIGHT HINGE | 6033010109 | 5€ | 6033010109 | 5€ | 6033010109 | 5€ | 6033010109 | 5€ |
| 28 | EJE PUERTA | SPINDLE DOOR | 6033090068 | 3€ | 6033090068 | 3€ | 6033090068 | 3€ | 6033090068 | 3€ |
| 29 | CAJA ALOJAMIENTO MUELLE | HINGE PIN SUPPORT | 6003010136 | 1€ | 6003010136 | 1€ | 6003010136 | 1€ | 6003010136 | 1€ |
| 30 | SOP. BISAGRA INF. DCH. | LOWER HINGE RIGHT SUPPORT | 6033010099 | 5€ | 6033010099 | 5€ | 6033010099 | 5€ | 6033010099 | 5€ |
| 31 | BISAGRA | HINGE | 6033010100 | 12€ | 6033010100 | 12€ | 6033010100 | 12€ | 6033010100 | 12€ |
| 32 | PUERTA GRANDE 1505x683mm | BIG DOOR 1505x683mm | A169010077 | 339€ | A169010077 | 339€ | A169010077 | 339€ | A169010077 | 339€ |
| 33 | BURLETE 1457x636mm | SEAL 1457x636mm | 6045010131 | 24€ | 6045010131 | 24€ | 6045010131 | 24€ | 6045010131 | 24€ |
| 34 | SOP.BISAGRA INF. IZQ. | LOWER HINGE LEFT SUPPORT | 6033010098 | 5€ | 6033010098 | 5€ | 6033010098 | 5€ | 6033010098 | 5€ |
| 35 | EJE PUERTA | SPINDLE DOOR | 6033090068 | 3€ | 6033090068 | 3€ | 6033090068 | 3€ | 6033090068 | 3€ |
| 36 | PUERTA PEQUEÑA 745x683mm | SMALL DOOR 745x683mm | A169010078 | 198€ | A169010078 | 198€ | A169010078 | 198€ | A169010078 | 198€ |
| 37 | PATA REGULABLE | ADJUSTABLE FEET | 6007050017 | 21€ | 6007050017 | 21€ | 6007050017 | 21€ | 6007050017 | 21€ |
| 38 | BANDEJA EVAPORACIÓN AUTOM. | AUTOMATIC EVAPORATION TRAY | A109050469 | 15€ | A109050469 | 15€ | A109050469 | 15€ | A109050469 | 15€ |
| 39 | RESISTECIA EVAPORACIÓN AUTOM | EVAPORATION RESISTANCE | 6021250073 | 19€ | 6021250073 | 19€ | 6021250073 | 19€ | 6021250073 | 19€ |
| 40 | CUBRE BANDEJA EVAPORACIÓN | EVAPORATION COVER TRAY | | | | | | | | |
| 41 | REJILLA TRASERA MOTOR | REAR MOTOR GRILLE | | | | | | | | |
| 42 | | | | | | | | | | |